PIÈCES DE REMPLACEMENT

REPLACEMENT PARTS

Version		3(from" MAR.2016 to this day)		2(from" DEC.2013 to MAR.2016)		1(from" APR.2009 to DEC.2013)	
S/N	DESCRIPTION	#PIÈCE / PART	3G #	#PIÈCE / PART	3G #	#PIÈCE / PART	3G #
1	Bec / Spout	3180072	AL1B0007C	3180072	AL1B0007C	3180072	AL1B0007C
2	Aérateur / Aerator	N/D	AH3B0003C	N/D	AH3B0003C	N/D	AH3B0003C
3	Plaque / Plate	N/D	AT1S0003C	N/D	AT1S0003C	N/D	AT1S0003C
4	Poignée / Handle	3051538	99-0327-CC	3180060	AD1Z0054C	3180060	AD1Z0054C
				3180048	AC1B0004X	3180048	AC1B0004X
5	Poignée / Handle	3051537	99-0328-CC	3180060	AD1Z0054C	3180060	AD1Z0054C
				3180111	AC2B0005X	3180111	AC2B0005X

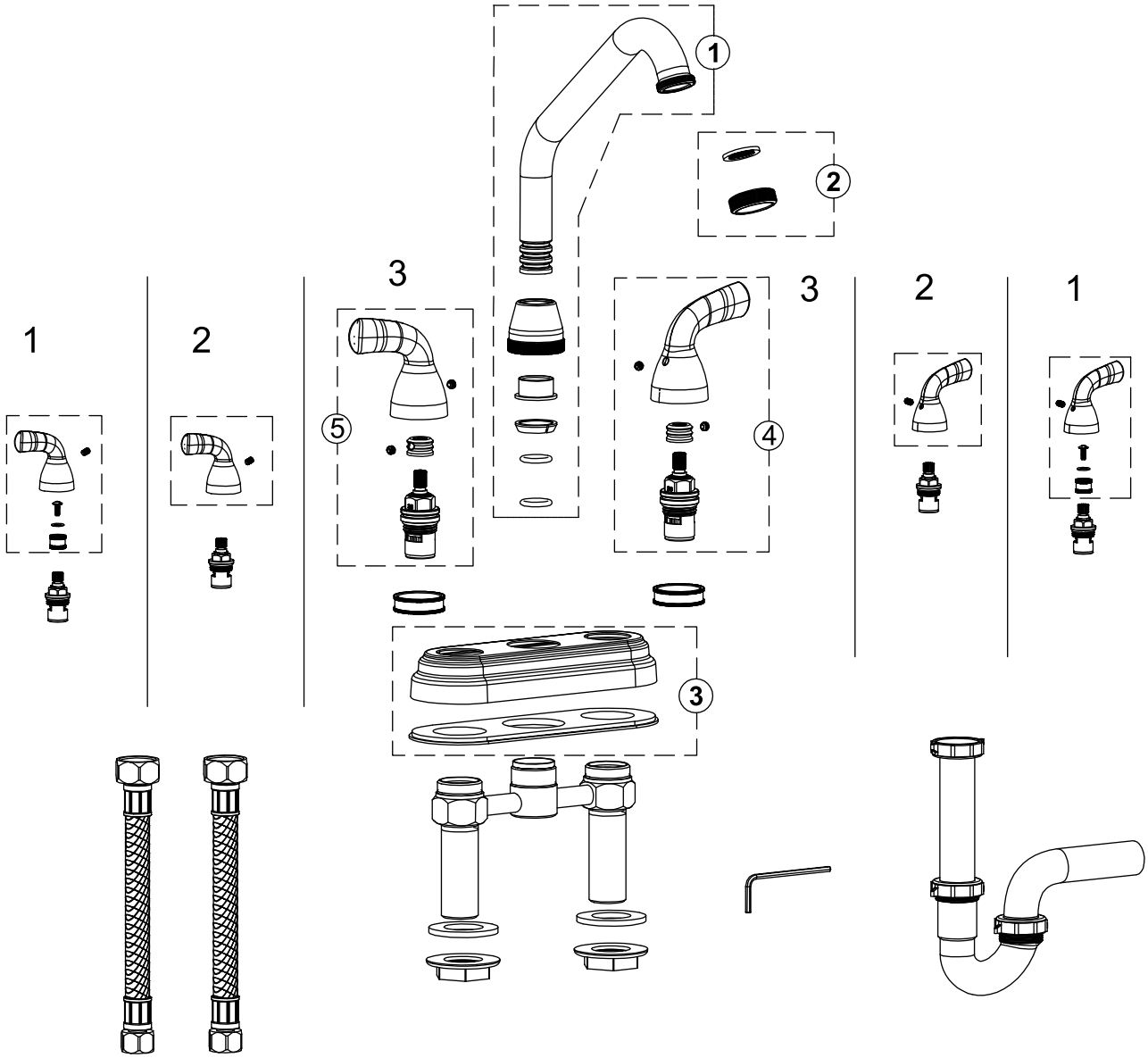

CMG07-2016

Fabriqué et emballé en Chine / Made and Packaged in China
Importé par / Imported by NOVELCA
Québec, Canada G2E 5W2

SALVO	CHROME
300033	
TASSILI.CA	

GARANTIE À VIE LIMITÉE
LIMITED LIFETIME WARRANTY

TASSILI